7 Services

We are the only manufacturer of laboratory equipment who offers you fume cupboards and variable fume cupboard control all from one supplier. Benefit from our know-how in the field of laboratory control.

All over the world we have realised a large number of projects of varying size; these projects are operated to the great satisfaction of our customers. This fact confirms our philosophy of acting as a system provider.

Furthermore, you as a customer will find it convenient and economical to have only one contact for all questions on the issue and also for maintenance.

Being a full-range supplier, we will plan and implement your project in no time – in the typical Waldner way. Being a market leader, we have the necessary capacity for your project – no matter how big. Please contact us. We will be glad to help you.

Airflow Controller

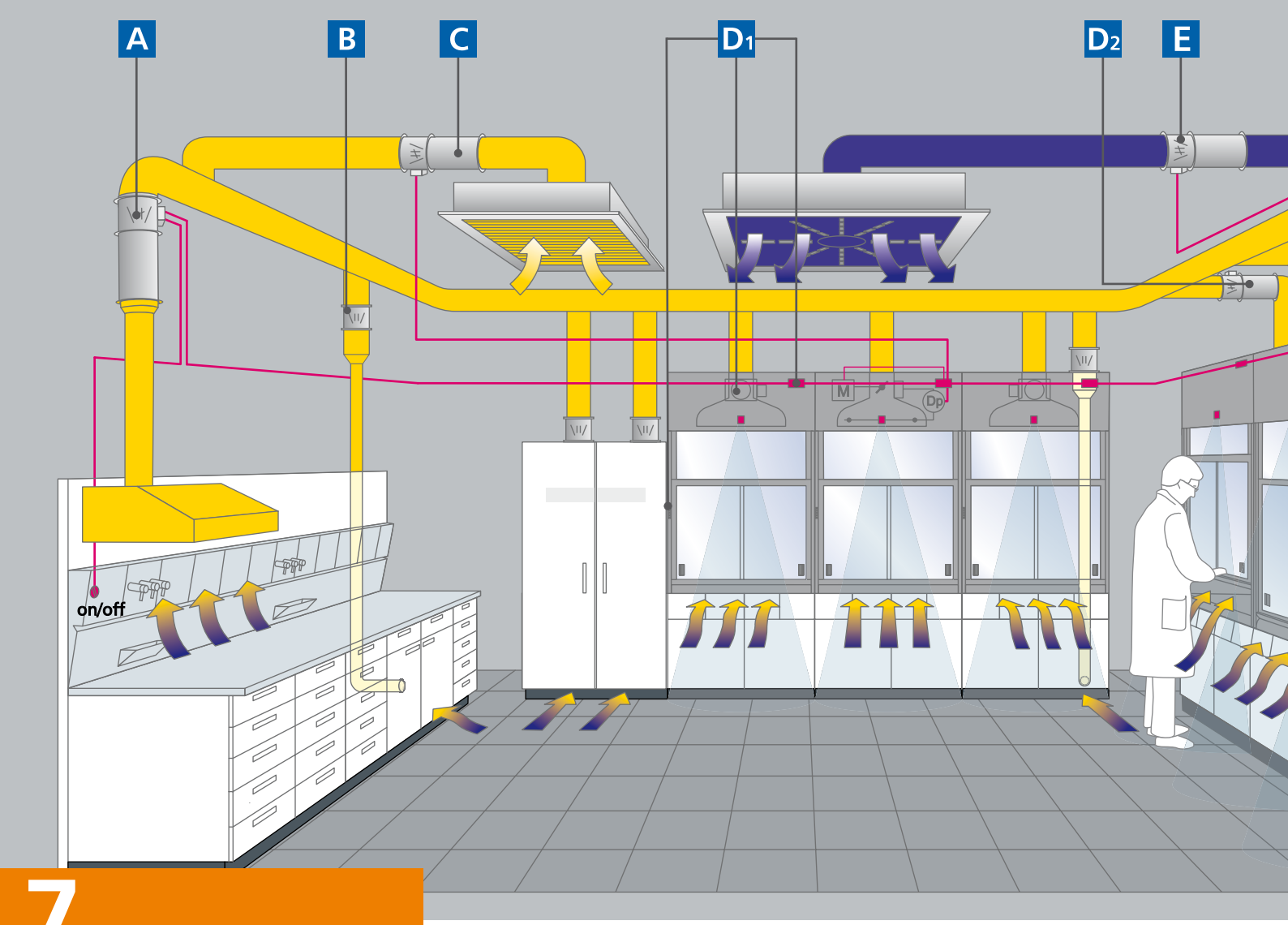

7 Services

Large cost savings in every operating state

From an economic point of view, the laboratory furniture and the ventilation of the entire laboratory building are no longer separate entities today. Waldner's intelligent laboratory control significantly reduces the operating costs of the ventilation system and ensures maximum work safety.

Sophisticated technology for optimum operation

Our fume cupboards are an important part of laboratory ventilation and can be integrated into the building ventilation concept in an ideal way. The measurement and control system of our Airflow-Controller identifies the state of utilisation of the fume cupboard reliably at any time and adjusts the air exchange rate precisely and safely within seconds.

If required, the user can increase or decrease the air exchange rate at the fume cupboard manually at any time.

Investing in our laboratory control will quickly pay for itself

A cost-benefit analysis clearly speaks for our laboratory control: Since the ventilation system is efficiently used while the energy supply is reduced, investing into this laboratory control system will pay off within one to two years. Considering continuously increasing energy prices, this is an important advantage.

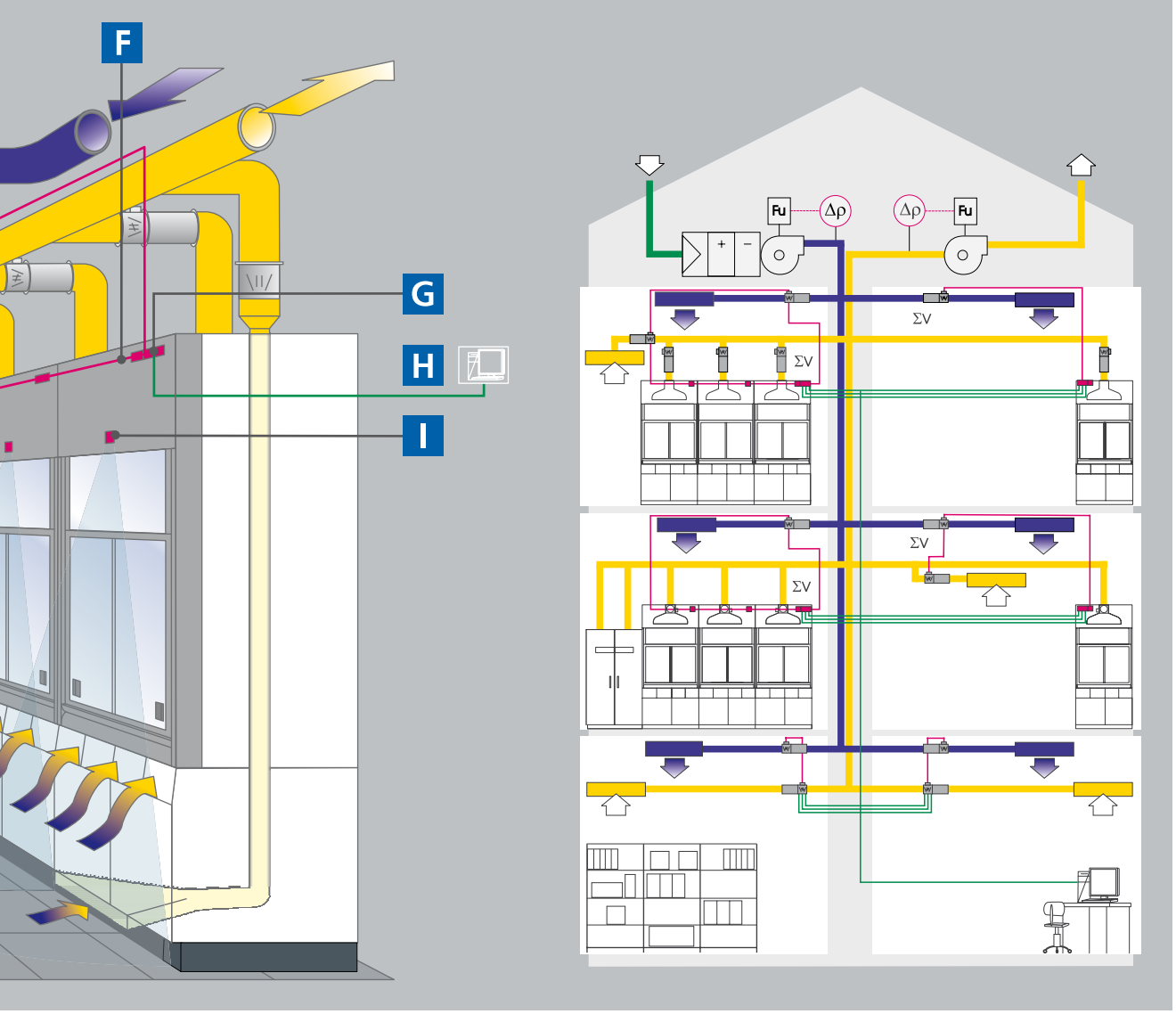

Ventilation and control as an overall concept

Being a leading system partner, we will develop an overall concept for your laboratory – from the appropriate sizing of the central ventilation system and the ducts to the selection and use of the appropriate process measuring and control technology.

- **A** Airflow damper extractor hood AC3 Compact
- **B** Mechanical airflow damper
- **C** Airflow damper extract air AC3 Compact
- **D1** Airflow-Controller AC3 v Standard
- **D2** Airflow-Controller AC3 v pipe controller
- **E** Airflow damper Supply air AC3 Compact
- **F** CAN-bus
- **G** Airflow-Controller with activated master function for laboratory control
- **H** The following methods of communication with the DDC/building control are possible: Analogue I/O, LON bus, Modbus, Profibus, BACnet, Ethernet
- **I** Sash controller SC

Control and monitoring
Control

Control – Airflow-Controller (AC) for fume cupboards DIN EN 14175-6

Airflow-Controller AC

The central control unit is a microprocessor-based electronic control unit and forms the heart of the Waldner control system.

The standard set value for the air exchange rate is determined via the sash position. The processor rapidly and precisely adjusts this value using defined control behaviour (adaptive or predictive). The microprocessor detects the required damper position, has a maximum regulating speed of two seconds for 90° and is equipped with a position control system. Setpoint changes settle fully within three seconds.

In addition during calculation, an appropriate measuring diaphragm coefficient is determined using a family of characteristics defined from the damper position and the differential pressure.

In accordance with EN 14175, a visual and acoustic alarm indicates when the value drops below the set value. A visual and acoustic alarm is also generated if the sash is opened beyond the maximum permitted sash opening.

As a standard, the control flap is used with an extract manifold. For rooms less than 3.30 m, motorised dampers must be used as pipe controllers.

On the use of the Secuflow technology, this feature is monitored and controlled. If the extract air volume drops below the stipulated extract air volume, the supportive flow technology is shut down.

If the supportive flow technology fails, this is indicated by a visual and acoustic alarm, and the extract air flow rate is automatically increased to the value for a standard fume cupboard.

1 Display and operating device

2 Sensors for detector of sash position

3 Extract manifold with actuator, measuring system and measurement acquisition

4 Central control unit AC

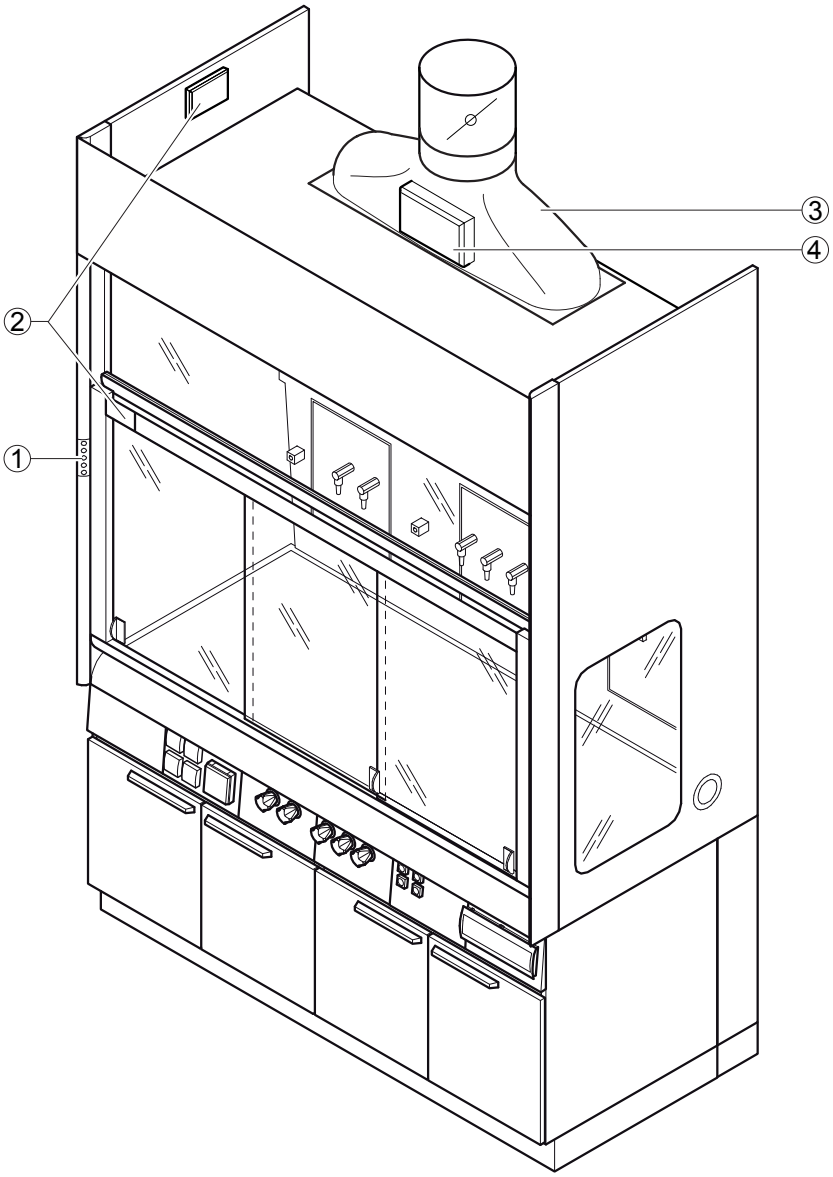

The fume cupboard and controller are an entity

The systems are precisely matched to each other, thus ensuring maximum reliability during laboratory operation.

The fume cupboard and variable air volume control are type-approved in accordance with EN 14175-6 as a complete safety system. Thus, the time-consuming and costly coordination of different trades becomes unnecessary and legal security and warranty are provided by one supplier, if need be.

Our patented measurement method and measuring system

Due to the variable measuring diaphragm coefficient and the special principle of operation of the measuring system, an airflow stroke of 1:15 can be realised. During night operation, the air volume at the fume cupboard can thus be reduced to 100 m³/h.

A measuring accuracy of +/- 5 % of the current actual value of the air exchange rate is also guaranteed. This is necessary to ensure that the directed airflow in the laboratory is maintained even if the air exchange rates are low.

EN 14175-6 type tested fume cupboard control in acc. with 5.4 Measuring in the outer measuring level

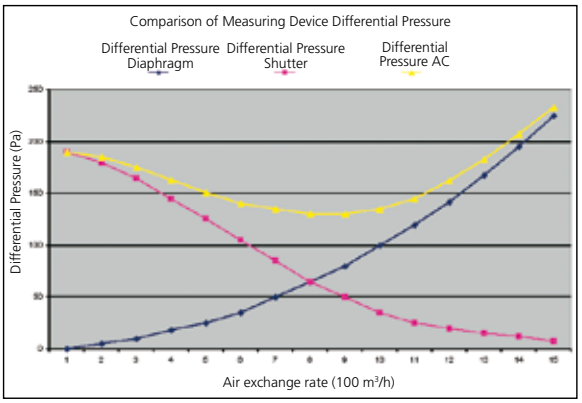

Differential pressure curve AC

Control panel AC

- *Light On/Off*
- *Visual and acoustic alarm*
- *Flushing function (increasing the air volume)*
- *Lowered operation*
- *Monitoring and control on / off*

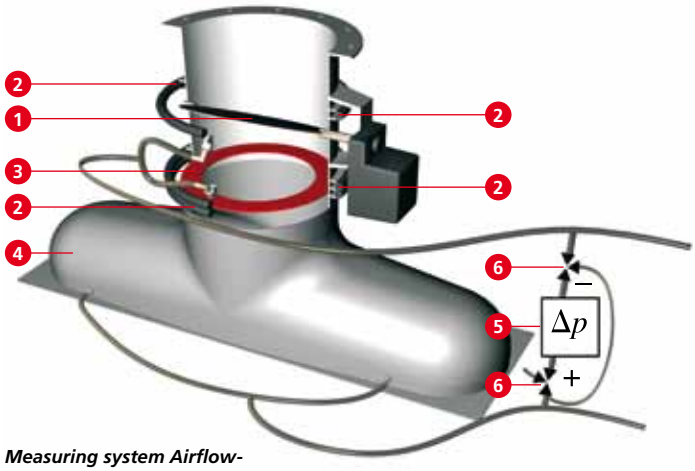

Measuring system Airflow-Controller

1 Control flap
2 Pressure measuring ducts
3 Measuring panel
4 Extract manifold
5 Pressure sensor
6 Magnetic valves

Control and monitoring
Control

Technical data

Characteristics	
Air exchange rate range for diameter DN 250	100 - 1500 m^3/h
Air exchange rate range for diameter DN 315	200 - 3000 m^3/h
Measuring accuracy to the actual value	+/- 5 %
Nominal capacity	35 VA
Motor run time for 0-90°	2 seconds
Control time	3 seconds adjusted
Permitted system pressure	100 - 600 Pa

Inputs	
Voltage supply	230 V
Digital input	6 (freely parametrisable)
Analogue input	1 (freely parametrisable)
Sash detector	2 pieces (sash and horizontal sash detector)
Modbus connection	RS 232
PDR connection	RS 232
CAN bus	

Outputs	
Digital output	5 (freely parametrisable)
Analogue output	1 (freely parametrisable)
Control of AC3 Compact	RS 485
Control panel connection	RJ 10
CAN bus	
Motor control	RJ 45

Design	
Airflow damper and monitoring	Constant or variable

Master function for room control

The module cyclically acquires the individual extract rates of the extracted units in the laboratory so that a total extract air volume can be formed.

A minimum air exchange can be maintained for four different operating states in the laboratory. If the minimum air exchange is not achieved by the minimum air values for the fume cupboards, the module determines the corresponding minimum value and sends it to the fume cupboards or room extract air airflow dampers. If a fume cupboard is opened and the minimum air exchange is exceeded, the remaining fume cupboards or the room extract air airflow damper are reduced to their minimum air value. If the minimum air exchange continues to be exceeded, the input air is increased.

The temperature and room pressure can be controlled with this module.

A stipulated simultaneity (per laboratory max. extract rate) for the use of the fume cupboards can be monitored. When the stipulated max. extract rate is exceeded, a signal is sent to the fume cupboards in the laboratory.

The control unit controls input and extract air airflow dampers (AC Compact) via the internal bus system.

Data between the laboratory control and the DDC or GLT can be exchanged using the following interfaces:

– Modbus RTU
– LON-Bus
– Profibus
– Ethernet
– BACnet
– Analogue I/0

Data points such as set values and actual values of the airflow dampers, motorised damper positions, error messages, operating states and sash positions of the fume cupboards can, e.g., be provided for visualisation.

Complete solutions are available for implementing a remote diagnostics system for laboratory control components.

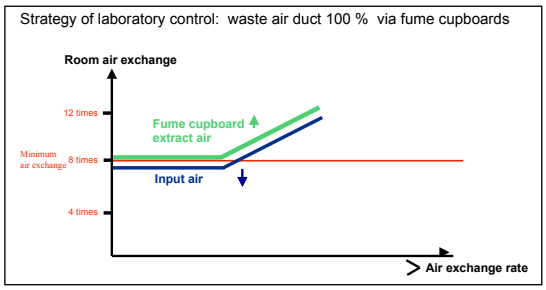

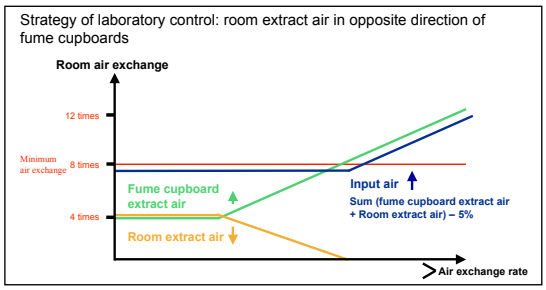

Two examples of laboratory control variants

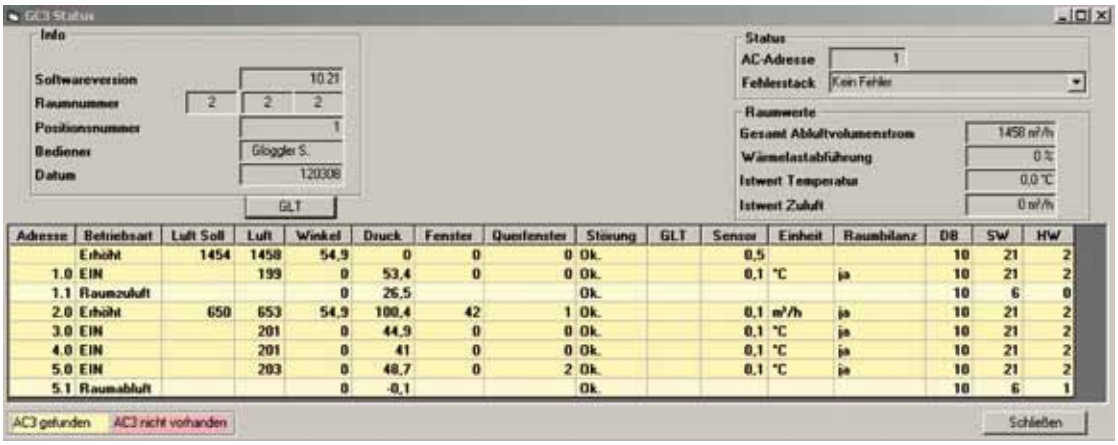

Control and monitoring
Airflow damper for room supply air and extract air

AC3 Compact

Areas of application
– Room input air controller
– Room extract air controller
– Airflow measuring system/measuring panel (without control flap and actuator)
– Extension module for AC3
Up to four AC3 Compact controllers can be connected and managed for each AC3 controller.

AC3 Compact
AC3 Compact, the microprocessor-based electronic control unit, controls the air volume infinitely.
It rapidly and precisely adjusts the air exchange rate to suit the set value using defined control behaviour (predictive and adaptive).

Performance criteria
– Control parameters are adaptively optimised online
– Standard tolerances are predictively corrected using a theoretical process model
– Control of the position of the motorised damper
– Floating time 5 seconds adjusted
3 seconds 80 % of the set value
– Freely parametrisable on a PC basis
– Integrated pressure sensor 0-250 Pa (pressure-resistant up to 2500 Pa)
– Motorised damper housing: galvanised, stainless steel, PPs

Connections (partly parametrisable)
– 2 x analogue output
– 1 x analogue input
– 1 x digital input
– 1 x control panel input RJ 10
– 1 x Modbus input internal RJ 45
– 1 x Modbus output internal RJ 45
– 1 x motor output RJ 45
– 1 x connector with twin terminals
24 VAC/DC, I max. 0.7 A (17 W)

AC3 Compact

Actuator

Galvanised controller housing with AC3 Compact and fast actuator

Technical data

Design values for round input and extract air airflow dampers

Nominal size	Installation length	Air exchange rate range B1		Air exchange rate range B0		Air exchange rate range B2	
[mm]	[mm]	Vmin	Vnom	Vmin	Vnom	Vmin	Vnom
100	530	27	190	19	136	39	272
125	530	43	299	31	214	61	428
160	530	71	494	50	353	101	706
200	580	111	776	79	554	159	1108
250	580	174	1217	124	869	249	1739
315	620	277	1939	198	1385	396	2770
355	620	352	2466	252	1762	504	3523
400	620	448	3135	320	2239	640	4479
500	960	701	4909	501	3506	1003	7012
630	960	1115	7806	796	5575	1595	11151

Design values for square input and extract air airflow dampers

Construction dimensions		Installation length	Air exchange rate range B1		Air exchange rate range B0		Air exchange rate range B2	
Width [mm]	Height [mm]	[mm]	Vmin	Vnom	Vmin	Vnom	Vmin	Vnom
200	140	530	98	689	70	492	141	984
250	140	530	123	862	88	616	176	1232
280	160	530	158	1107	113	791	226	1581
315	180	580	201	1404	143	1003	287	2006
355	200	580	252	1761	180	1258	360	2516
400	224	580	318	2227	227	1590	455	3181
400	280	580	398	2788	284	1992	570	3983
315	315	620	353	2469	252	1763	504	3527
355	355	620	449	3140	320	2243	641	4486
400	400	620	570	3992	407	2851	815	5703
500	400	620	714	4995	509	3598	1020	7135
630	400	620	900	6299	642	4499	1287	8998
800	400	620	1143	8004	816	5717	1635	11434
630	200	620	433	3133	316	2238	633	4476

For optimum adaptation of the airflow dampers to the air exchange rate range and the size of the duct network, the measuring panel sizes (B1/B0/B2) are available for each dimension. The standard version of the airflow dampers includes the measuring panel B1.
Maximum air velocity in the measuring panel:
B1: 7 m/s; B0: 5 m/s; B2: 10 m/s

Control and monitoring
Monitoring

Control – Function display (FAZ) for fume cupboards EN 14175-2

EN 14175-2 requires continuous monitoring of the ventilation function of fume cupboards to warn the laboratory personnel with visual and acoustic signals in the event of a fault. The visual signal cannot be cancelled.

The FAZ is an electronic monitoring system that continuously measures the extract air volume rate. It provides an acoustic alarm and a visual alarm when the flow rate drops below the threshold set for the extract air. Since the air exchange rate and – if applicable – the Secuflow technology are continuously checked, permanent monitoring of the fume cupboard's ventilation function is ensured.

The display is in the guide profile on the fume cupboard. Alarms, e.g. shortage of air, are indicated in red and warnings, e.g. exceeding the max. operational sash opening height, are indicated in orange. The acoustic alarm can be deactivated by pressing a switch button. Switching on/off the FAZ by the user can be enabled as an option.

Airflow measurement FAZ

The extract-air manifold on the fume cupboard is used to generate the pressure signal.

The measurement is a differential pressure measurement. The function display works independent of room pressure fluctuations and independent of the sash opening.
During night operation, a second air volume can be monitored.

FAZ control panel

– Light On/Off

– Visual and acoustic alarm

– Not occupied

– Night operation display

– Functional monitoring On / Off

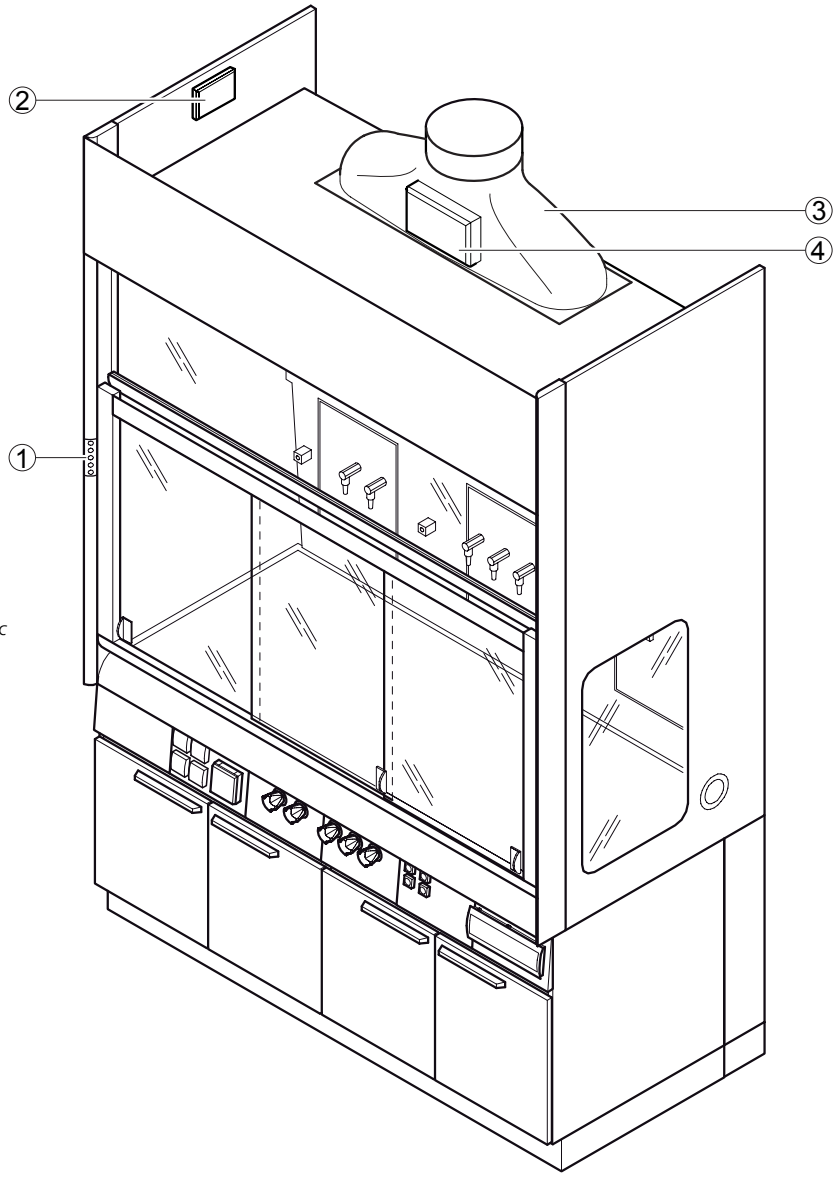

1 Display and operating device
2 Potentiometer sash position
3 Extract manifold with differential pressure measurement
4 Central control unit FAZ

Differential pressure measurement FAZ
1 Extract manifold, available in two designs:
Diameter of 250 mm and diameter of 315 mm
2 Pressure sensor

Diameter of measuring tube of 250 mm
for fume scrubber and filter fume cupboards

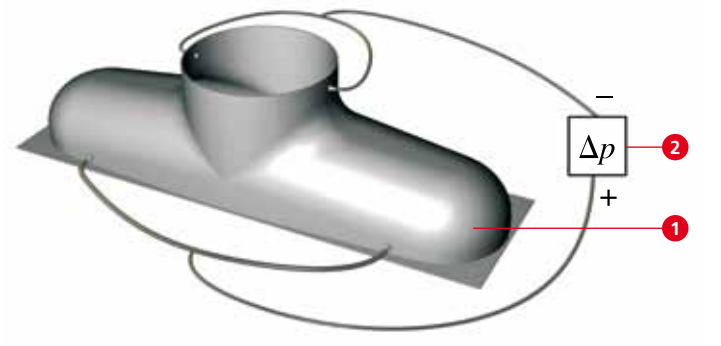

Technical data

Monitoring	Function display (FAZ)
Power supply	230 V
Outputs	Alarm output
	Operating message
	Light switch
Inputs	On
	Off
	Acoustic alarm acknowledgement
	Night operation
Diameter [mm]	250, 315
System connection	Analogue I/O, Modbus

Sash controller SC

If the operator slightly moves the sash, the opening or closing movement of the sash is supported and continued by a motor.

The sash electronics close the fume cupboard sash using a motor when the fume cupboard is not in use. The area in front of the fume cupboard is monitored by a motion detector. If no movement is detected in front of the fume cupboard for a certain period of time, the sash is closed. The photo-electric barrier integrated in the bottom edge of the sash is used to detect obstacles in the path of the sash and the closing process is stopped.

The use of a sash controller means that the requirement in TRGS 526 to close fume cupboards when they are not currently in use is implemented automatically in practice.

The closing delay after the sensors are enabled can be set between thirty seconds and fifteen minutes.

In combination with an Airflow Controller, the SC can also be connected to the DDC/GLT.

Component parts:
1) Processor-controlled central control unit
2) Motor drive (closes and opens the sash)
3) The photo-electric barrier integrated in the sash frame serves to detect obstacles in the path of the sash when the sash is automatically closed
4) The motion detector stops the sash when working in front of the sash

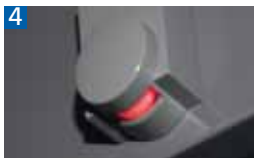

Technical data SC

Closing device	Sash controller SC
Power supply	24 V DC
Nominal capacity	48 VA
Inputs	Open Closed